Operating Manual Version 1.0

Model 525

Pulse Generator

Berkeley Nucleonics Corporation
2955 Kerner Blvd.
San Rafael, CA 94901
Phone: 415-453-9955
Fax: 415-453-9956
Email: info@berkeleynucleonics.com
Web: www.berkeleynucleonics.com

Contents

1 Introduction

This manual is a reference designed to familiarize you with the BNC Model 525 Series Pulse Generator and is arranged so that you can easily find the information you're looking for. Generally, each topic has its own section and no section assumes that you've read anything else in the manual.

Technical specifications including electrical ratings and weight are included within the manual. See the Table of Contents to locate the specifications and other product information. The following classifications are standard across all BNC Test and Measurement products.

- Indoor use only
- Ordinary Protection: This product is NOT protected against the harmful ingress of moisture.
- Class 1 Equipment (grounded type)
- Main supply voltage fluctuations are not to exceed +/-10% of the nominal supply voltage.
- Pollution Degree II
- Installation (overvoltage) Category II for transient overvoltage events
- Maximum Relative Humidity: 0-80% RH, non-condensing
- Operating temperature range of 0 ^{o} C to 40 ^{o} C
- Storage and transportation temperature of -40 ^{o} C to 70 ^{o} C
- Maximum altitude: 2000 m (6562 ft.)
- This equipment is suitable for continuous operation.
- Cleaning Instructions: Light dusting with cloth damp with water and/or usage of compressed air is all that is needed.

1.1 Technical Support

For questions or comments about operating the Model 525 our technical staff can be reached via one of the following methods:

• Phone - (415) 453-9955

• Fax - (415) 453-9956

• Email – info@berkeleynucleonics.com

• Internet - www.berkeleynucleonics.com

1.2 Warranty

In addition to a 30-day money back guarantee, the model 525 has a two-year limited warranty from the date of delivery. This warranty covers defects in materials and workmanship. If repairs are required during the warranty period, contact the factory for component replacement or shipping instructions. Include the serial number of the instrument. This warranty is void if the unit is repaired or altered by others than those authorized by Berkeley Nucleonics Corporation.

1.3 Package Contents

The box you receive should contain the following:

- Model 525 Digital Delay / Pulse Generator
- USB Cord
- Disk that includes:
  - Operating Manual
  - Software Drivers
  - Application Software

Contact BNC (415) 453-9955 if any parts are missing.

2 Safety Issues

Normal use of test equipment presents a certain amount of danger due to electrical shock because it may be necessary for testing to be performed where voltage is exposed.

An electrical shock causing 10 milliamps of current to pass through the heart will stop most human heartbeats. Voltage as low as 35 VDC or 35 V_{RMS} AC should be considered dangerous and hazardous, as it can produce a lethal current under certain conditions. Higher voltages pose an even greater threat because such voltage can easily produce a lethal current. Your normal work habits should include all accepted practices that will prevent contact with exposed high voltage and steer current away from your heart in case of accidental contact with a high voltage. You will significantly reduce the risk factor if you know and observe the following safety precautions:

- If possible, familiarize yourself with the equipment being tested and the location of its high-voltage points. However, remember that high voltage may appear at unexpected points in defective equipment.
- Do not expose high voltage needlessly. Remove housing and covers only when necessary. Turn off equipment while making test connections in high- voltage circuits. Discharge high-voltage capacitors after shutting down power.
- When testing AC powered equipment, remember that AC line voltage is usually present on power input circuits, such as the on-off switch, fuses, power transformer, etc.
- Use an insulated floor material or a large, insulated floor mat to stand on, and an insulated work surface on which to place equipment. Make certain such surfaces are not damp or wet.
- Use the time-proven “one hand in the pocket” technique while handling an instrument probe. Be particularly careful to avoid contact with metal objects that could provide a good ground return path.
- Never work alone. Someone should always be nearby to render aid if necessary. Training in CPR first aid is highly recommended.

3 Certificate of Conformance

MANUFACTURERS DECLARATION OF CONFORMITY

Application of Council Directive(s)	EMC Directive 89/336/EEC
	Low Voltage Directive 73/23/EEC 93/68/EEC
Manufacturer's Name	Quantum Composers, Inc.
Manufacturer's Address	212 Discovery Drive
	Bozeman, Montana 59718
Model Name	525 Series
Starting Serial No.	36590
Year of Manufacture	2018
Conformance to	EN 61326-1: 2006 Basic Requirements
	EN 61010-1: 2010 Part 1

We, the undersigned, hereby declare that the equipment specified above conforms to the above Directive(s).

Location Bozeman, Montana

Representative Name Paula Carstensen

Date August 20, 2018

Title V.P. Product Development

(Signature)

4 Front & Back Panel Overview

4.1 Front Panel

4.1.1 Indicators

A total of up to 9 separate LED indicators are included on the front panel of the 525. The following details the type of indication they represent.

- Power — Indicates the unit is powered on.
- Channel A-F — Indicates which channels are in the enabled state.
- Active — Indicates the unit is armed and/or channels are actively pulsing (or waiting to be triggered).
- Ext In — Indicates external mode is either set to gate or trigger.

4.1.2 Run/Stop/Power Button

The Run/Stop button serves the dual purpose of both powering on/off the unit as well as enabling/disabling the system output. It should be noted that only a short press is needed to both turn on and arm/disarm the unit. The button needs to be pressed and held for approximately 1 second in order to power off the unit. In the power off sequence the active settings are saved and reloaded when the unit is power back on.

The following image represents the front panel of a 525.

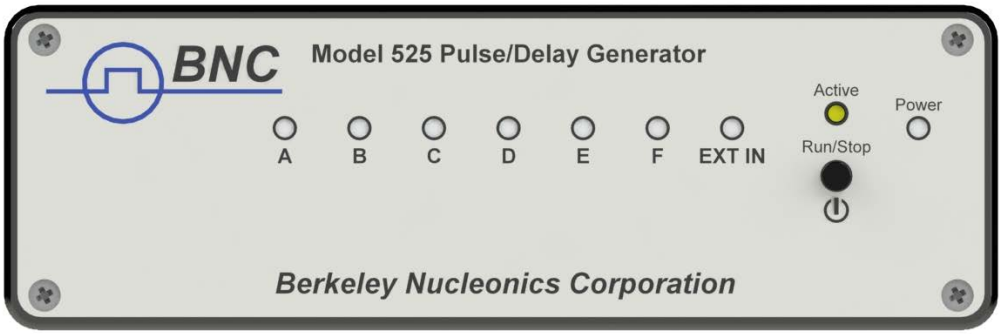

Figure 3.1 - 525 Front Panel

4.2 Back Panel

4.2.1 Indicators

A total of up to 10 separate LED indicators are included on the back panel of the 525.The following further details the type of indication they represent.

- PWR — Indicates the unit is powered on.
- Channel A-F — Indicates which channels are in the enabled state.

- Active — Indicates the armed channels are actively pulsing (or waiting to be triggered).
- Gate/Trig — Indicates which mode the external input is in. If neither is illuminated, the unit is in internally triggered mode.

4.2.2 BNC Output Connectors

Standard BNC connectors are found on the back panel which output the pulses for their respective channel.

4.2.3 USB

A "Standard B" female type USB connector is found on the back panel. This provides power to the unit as well as communication (on standard units).

4.2.4 Run/Stop/Power Button

The Run/Stop button serves the dual purpose of both powering on/off the unit as well as enabling/disabling the system output. It should be noted that only a short press is needed to both turn on and arm/disarm the unit. The button needs to be pressed and held for approximately 1 second in order to power off the unit. In the power off sequence the active settings are saved and reloaded when the unit is power back on.

4.2.5 Gate/Trigger Input

The Gate/Trig input allows external signals to either trigger or gate output events depending on setup.

4.2.6 Clock In /Clock Out

The Clock In allows external synchronization with other instruments. Various clock frequencies can be applied to the input when the unit is set to external clock mode. The Clock Out will output various frequencies as well as a T0 signal. These outputs are user selectable.

The following image represents the back panel of a 525.

Figure 3.2- 525 Back Panel

5 Pulse Concepts and Pulse Generator Operations

5.1 Counter Architecture Overview

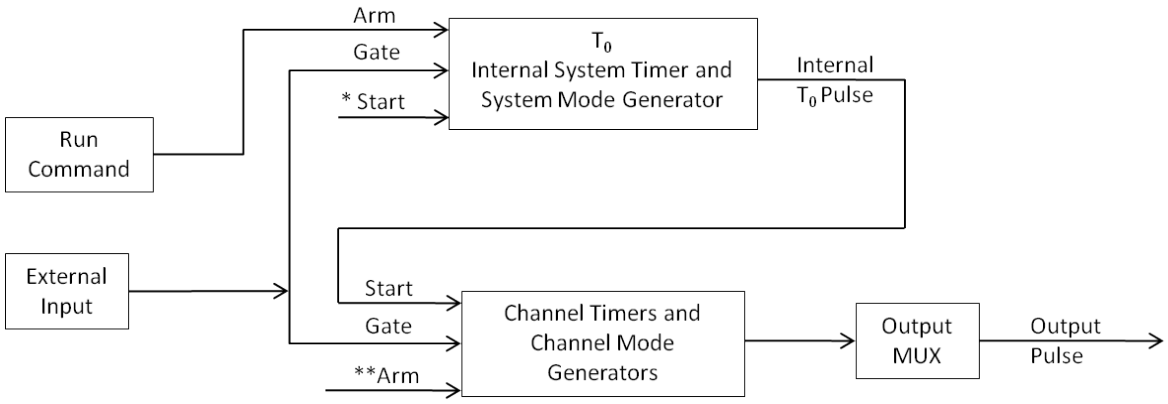

*Start source is: Run/Stop button/function in Internal Modes
External input in External Trigger modes
*TRG command via Serial access

**Channels are armed by the Run/Stop function (external button or through 525 application). In single shot and burst modes channels may be rearmed by pressing the RUN button again.

5.2 System Timer Functions

The System Timer functions as a non-retriggerable, multi-vibrator pulse generator. This means that once started, depending on the mode, the timer will produce pulses continuously. Before pulses can be generated, the timer must be armed and then receive a start pulse. Arming the counter is done by enabling the Run/Stop function by either the external button or through the 525 application. With external trigger disabled, the Run/Stop function also generates the start command for the counter. With external trigger enabled, the external trigger provides the start pulse. In either case, once started, the counter operation is determined by the System Mode Generator. Standard modes include:

- Continuous — Once started T_0 pulses are generated continuously.
- Single Shot — One T_0 pulse is generated for each start command.
- Burst — 'N' T_0 pulses are generated for each start command.
- Duty Cycle — Once started T_0 pulses cycle on and off continuously.

The T_0 pulse is distributed to all of the start inputs of the Channel Timers and Mode Generators.

5.3 Channel Timer Functions

The Channel Timer functions as a non-retriggerable, delayed, one shot pulse generator. This means that the timer will only generate one delayed pulse for every start pulse received. Once the channel timer has started counting, additional start pulses will be ignored until the pulse has been completed (non-retriggerable). The start pulse for each channel is provided by the internal T_0 pulse generated by the internal system timer. Whether or not a pulse is generated for each T_0 pulse is determined by the Channel Mode Generator.

Standard modes include:

- Normal — A pulse is generated for each T_0 pulse.
- Single Shot — One pulse is generated for the first T_0 pulse, after which the output is inhibited.
- Burst — 'N' number of pulses are generated for each T_0 pulse, after which the output is inhibited.
- Duty Cycle — 'N' number of pulses are produced, one for each T_0 pulse, after which 'M' number of pulses will be inhibited, one for each T_0 pulse. The cycle is then repeated for each subsequent T_0 pulse.

A Different mode may be selected for each channel, allowing a wide variety of output combinations. Each output may also be independently disabled or gated (using the external gate input).

5.4 Digital Output Multiplexer

The outputs of each of the Channel Timers are routed to a set of multiplexers. This allows routing of any or all Channel Timers to any or all of the units' outputs. In the normal mode of operation, the output of the nth Channel Timer is routed to the nth output connector. As an example, if a double pulse is required on Channel A, one can multiplex the Channel A timer with the Channel B timer, then adjust each timer to provide the necessary pulses. Only the timing parameters are multiplexed together, not the actual output amplitudes.

5.5 Dependent & Independent Timing Events (Sync Function)

The 525 allows the user to control the relationship between the Channel Timers by setting the sync source for each timer. Independent events are all timed relative to the internal T_0 start pulse. Dependent events may be linked together by setting the sync source to the controlling event. This allows the instrument to match the timed events and adjustments can be made in one event without detuning the timing between it and the dependent event.

5.6 Navigating the 525

Primary control of the 525 is carried out either through the 525 application (see 525 application Menus) or through unit specific commands using a terminal program via USB (see Programming the 525). The Run/Stop buttons found on either side of the 525 serve the purpose of both power on/off as well as enabling/disabling the system output.

5.7 Enabling System Output

The Run/Stop button found on both the front and back panel of the 525 is used to arm the system. With external trigger disabled, the button will arm and start pulse output. With external trigger enabled, the button will arm the pulse generator. Pulse outputs then start~~s~~ after the first valid trigger input. Pressing the Run/Stop button a second time disables the pulse generator.

Please contact Berkeley Nucleonics for the full User Manual

Berkeley Nucleonics Corporation
info@berkeleynucleonics.com | www.berkeleynucleonics.com
2955 Kerner Blvd, San Rafael, CA 94901 | 800-234-7858